Particle Classification

VCU Innovation Gateway
Office of Research and Innovation

Particle Mobility Classifier

Curved particle electrical mobility classifier

Sensors for measuring size distribution of airborne particulate matter (PM), especially in the size range less than 1 µm, are required for various applications related to fine and ultrafine particles. With the increasing health concern of fine PM in air, air quality monitoring has a growing demand for a cost-effective, miniature and lightweight PM sensors

The technology

Researchers at Virginia Commonwealth University have developed a miniature electrical particle sizer (mini-eUPS) with an extended sizing-range via a curved design to greatly reduce the size of the design. This design allows for extended particle sizing range, with maximized space utilization, when compared to counterparts with the classical configurations. The mini- eUPS extends the length of classification channel by at least a factor of 3 or more when compared to mobility classifiers in the classical configurations of the same physical size.

Based on its design (Figure 1), the mini-eUPS can be operated in two modes- precipitation and size-classification. Both modes have been tested and proven to extend particle range with sufficient sizing resolution. The figure (Figure 2) to the left demonstrates the performance of mini- eUPS in the size-classification mode where total flow rate of 1.8 lpm and aerosol to sheath flow rate of 1:5 for particles from 30 nm to 200 nm.

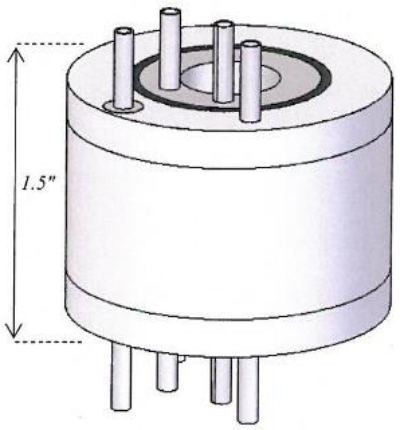

Figure 1: Design of apparatus

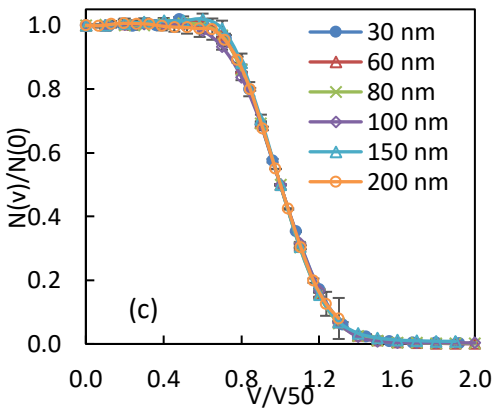

Figure 2: Performance of mini-eUPS

Benefits

- Reduced design size and weight
- Cost-efficient and low maintenance
- Extended particle size range

Applications

- Near-ground air pollution monitoring and control
- Vertical profiling of particle matter (PM) in the atmosphere
- Measurement of fine and ultrafine PM in emission exhausts
- Early fire detection
- Industrial hygiene
- Particle process monitoring and control

Patent status:

Patent issued: U.S. rights are available.
US10845288B2

License status:

This technology is available for licensing to industry for further development and commercialization.

Category:

Engineering and physical science

VCU Tech #:

15-076F

Investigators:

Daren Chen, Ph.D.
Qiaoling Liu, Ph.D

External resources:

Prototypes have been developed and tested.
CirEAC 2018
mini-eUPS 2020

Contact us about this technology

Koffi Egbeto, MS
Licensing Associate
egbetok@vcu.edu
(804) 827-2213